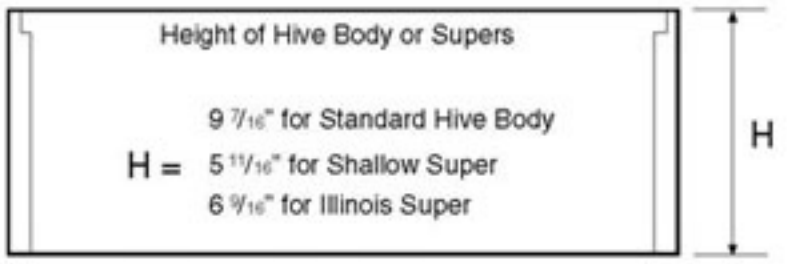

Side view of hive body or supers.

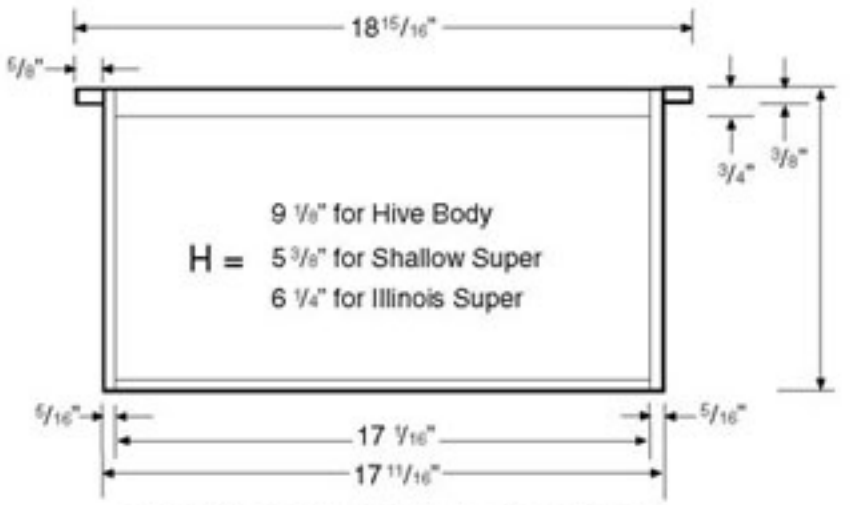

Side view of frame for hive body or supers.

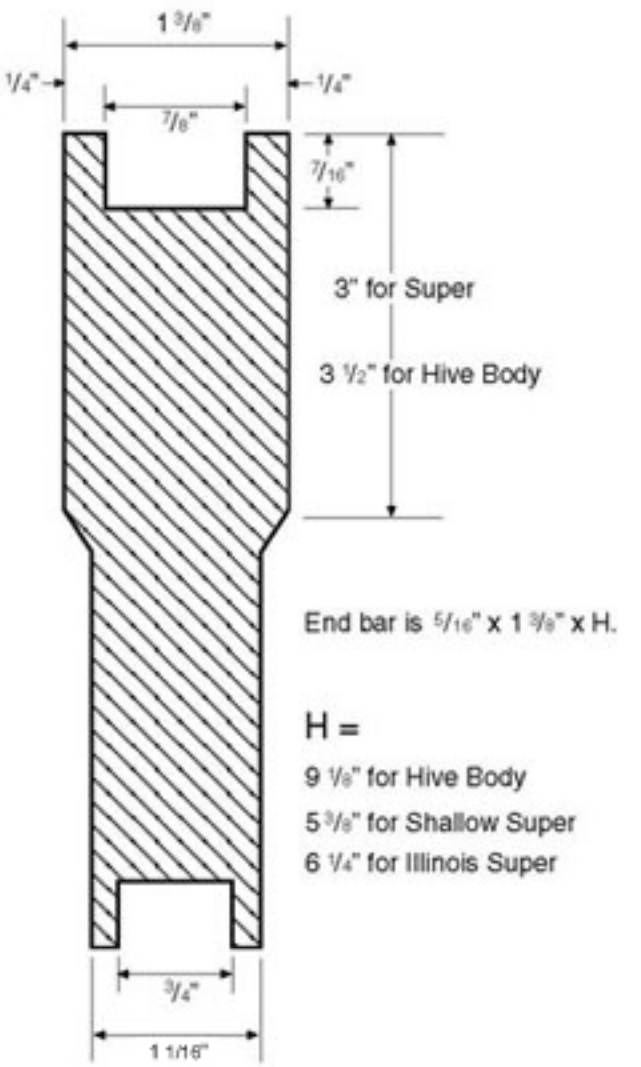

End bar dimensions.

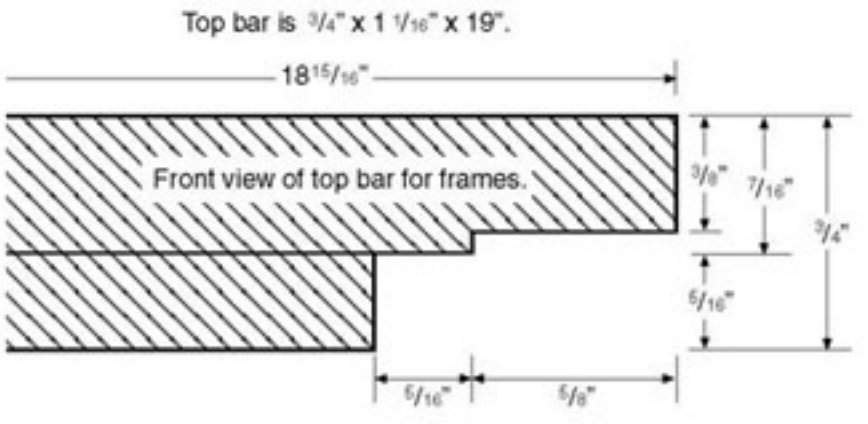

Top bar dimensions.